Trade of Sheet Metalwork	
Module 4:	**General Sheet Metalwork**
Unit 3:	**Cylindrical Offset**
	Phase 2

Table of Contents

List of Figures **4**

List of Tables **4**

Document Release History **5**

Module 4 – General Sheet Metalwork **6**

Unit 3 – Cylindrical Offset 6
Learning Outcome: 6
Key Learning Points: 6
Training Resources: 7
Key Learning Points Code: 7

Offset **8**

Pattern & Elevation of Offset **9**

Self Assessment **10**

Answers to Questions 1-2. Module 4.Unit 3 ..... **11**

Index **13**

List of Figures

Figure 1 – Offset 8
Figure 2 - Pattern and Elevation of Offset 9

List of Tables

Document Release History

Date	Version	Comments
13/11/06	First draft	
09/01/07	Implemented edits from Brendan Deasy.	
08/04/14	2.0	SOLAS transfer

Module 4 – General Sheet Metalwork

Unit 3 – Cylindrical Offset

Duration – 7 Hours

Learning Outcome:

By the end of this unit each apprentice will be able to:

- Read and interpret drawing for cylindrical offset
- Produce elevation, half plan and development
- Calculate circumference, material required, production sequence
- Cut, deburr, roll, groove and finally shape cylinder
- Form paned-down joint using paning wheels and rotary (swaging) machine
- Closing paned-down joint using closing wheels

Key Learning Points:

D	Drawing and development of offset.
P	Correct sequence of operations and material requirements.
Rk	Importance of joint position in relation to economy of metal.
Rk	Importance of marking out cylinders in relation to rolling and joint position.
Sk	Adjusting/setting of paning wheels/apron to give good joint profile.
Sk	Adjusting/setting of closing wheels to close paned-down joint.
Rk	Types and position of joints.
Rk	Rotary (swaging) machine - use and application.

Training Resources:

- Toolkit
- Work sample
- Safety equipment and protective clothing
- Tools and machinery/equipment
- Job card
- 0.6mm galvanised mild steel
- Book – the Geometry of Sheet Metal Work

Key Learning Points Code:

M = Maths D= Drawing RK = Related Knowledge Sc = Science

P = Personal Skills Sk = Skill H = Hazards

Offset

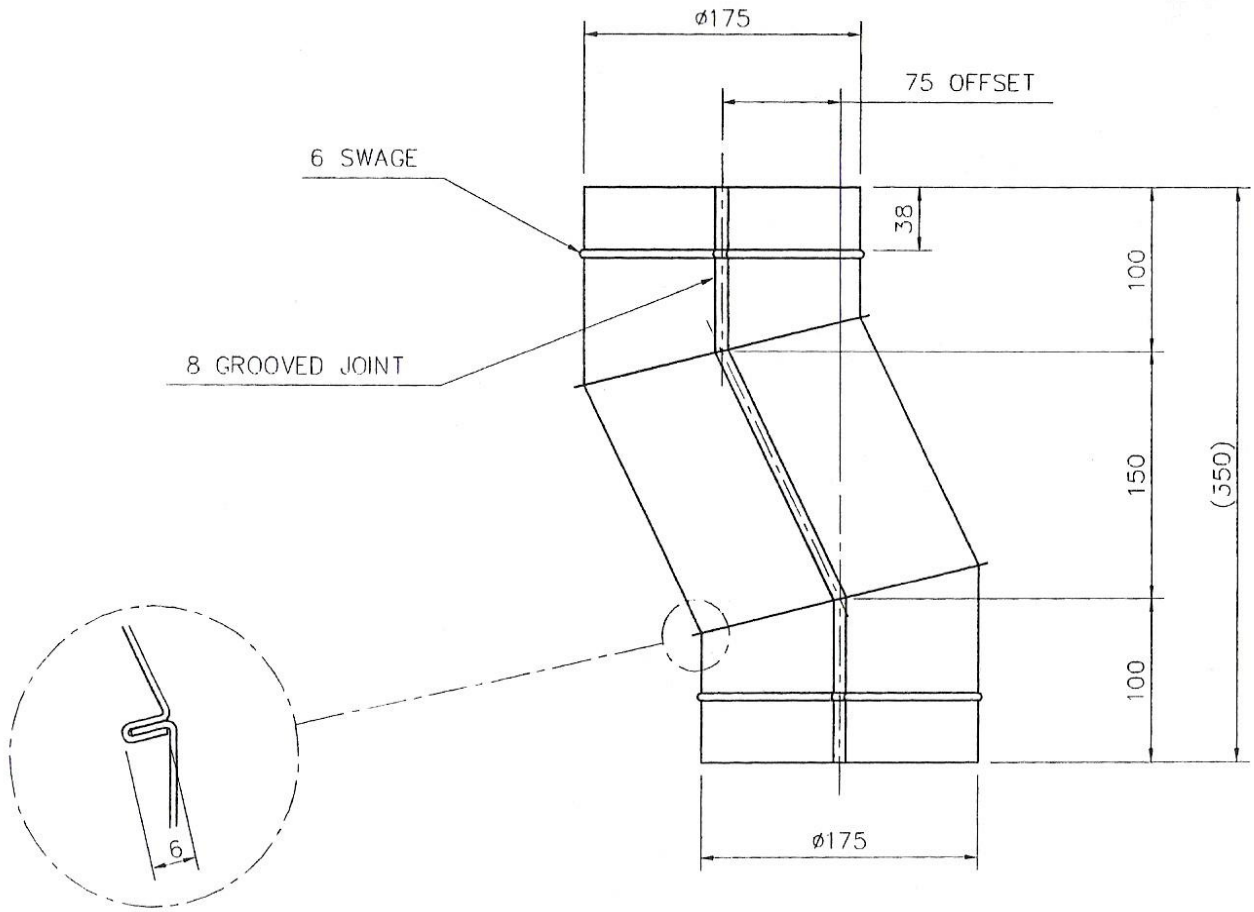

Figure 1 – Offset

When manufacturing this piece we use the "fish pattern". We put the joint on line 3 to achieve this. From an aesthetic point of view it is important to get the joints all on the one side. Take care to check this before you close the groove joint. If you get this wrong it is easy to put the required cylinder in the rollers and reverse the roll.

When assembling jobs we use cross joints and longitudinal joints.

Pittsburgh lock or lock former grove joints and a clip-lock are all longitudinal joints.

Paned joints, feather edge, slip joint and flanging are examples of cross joints. Job specifications normally dictate which joints we use.

We should take into account airflow and water lodgement when assembling a pane joint, as air leakage and corrosion may happen.

Pattern & Elevation of Offset

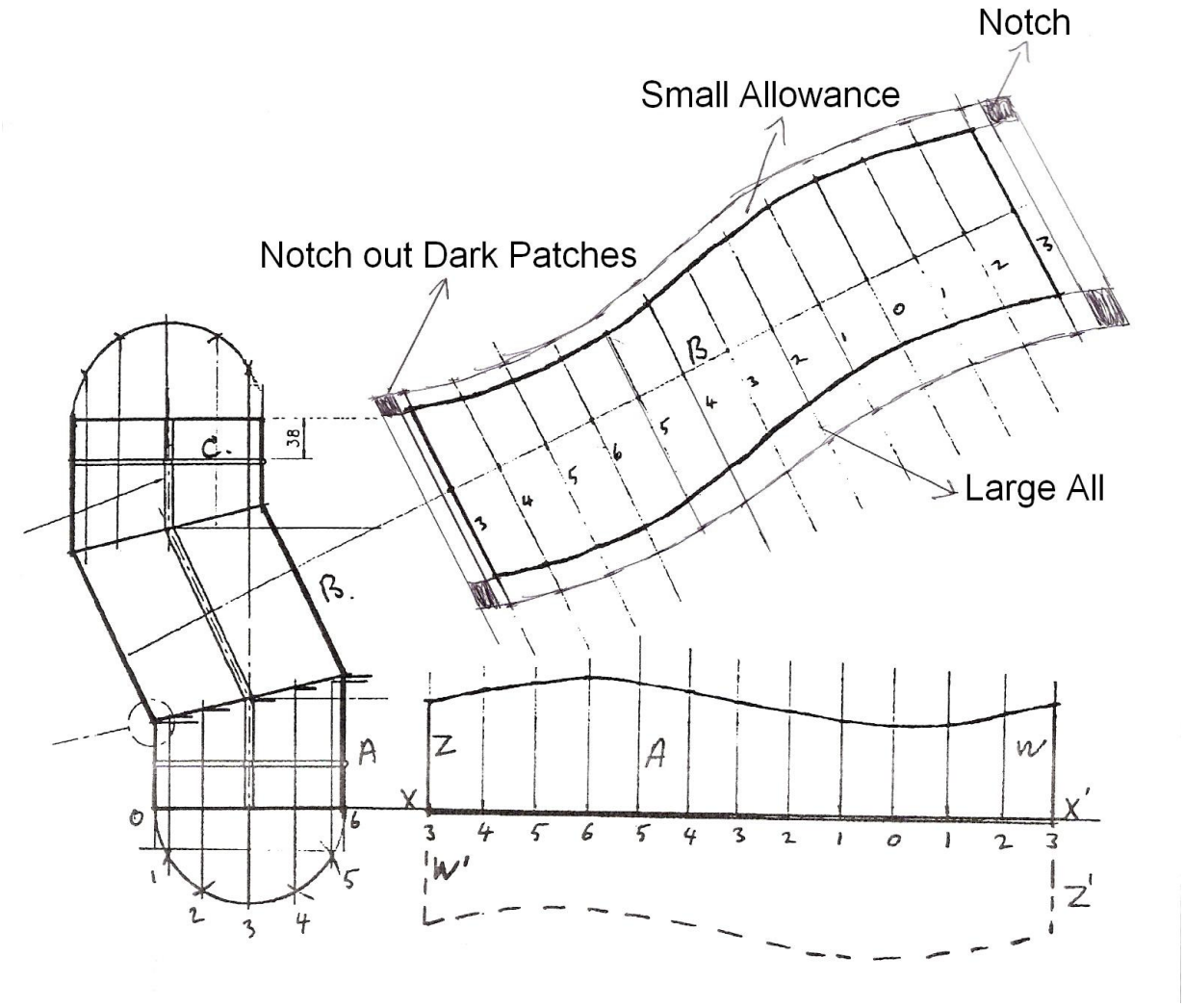

Figure 2 - Pattern and Elevation of Offset

The top pattern has an allowance for pane joint and groove.

The bottom pattern has no allowances added. This is suitable only for a welded connection.

The short way to mark out the above offset is to mark out pipe *A*. Flick the pipe *A* over at line *X X¹* and flick again so line *Z* goes to *Z¹* and line *W* to *W¹*. You can see the similarity between the middle pipe *B* and pipe *A*.

Pipe *A* and *C* are identical and rolled the same way to ensure joints line up.

Self Assessment

Questions on Background Notes – Module 4.Unit 3

1. Sketch a Pein joint and show which way the water should flow to prevent or reduce corrosion around the joint area.

2. When developing a pattern, what number do we start the pattern on?

Answers to Questions 1-2. Module 4.Unit 3

1.

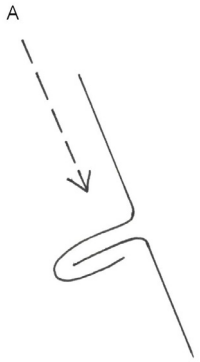

If water flows in direction **A** it will not lodge in the joint reducing the chance of corrosion.

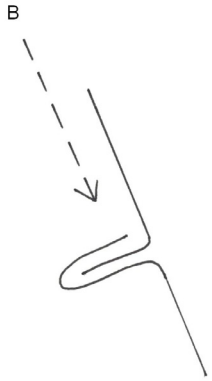

If water flows in direction **B** it will lodge in the joint.

Figure 1

2.

To reduce the amount of scrap we start the pattern at the joint which is no. 3. this pattern is sometimes referred to as the fish pattern as it resembles a fish.

Index

O

Offset, 8

P

Pattern & Elevation of Offset, 9

S

Self Assessment, 10